ZONE	REV.	DESCRIPTION	DATE	APPROV

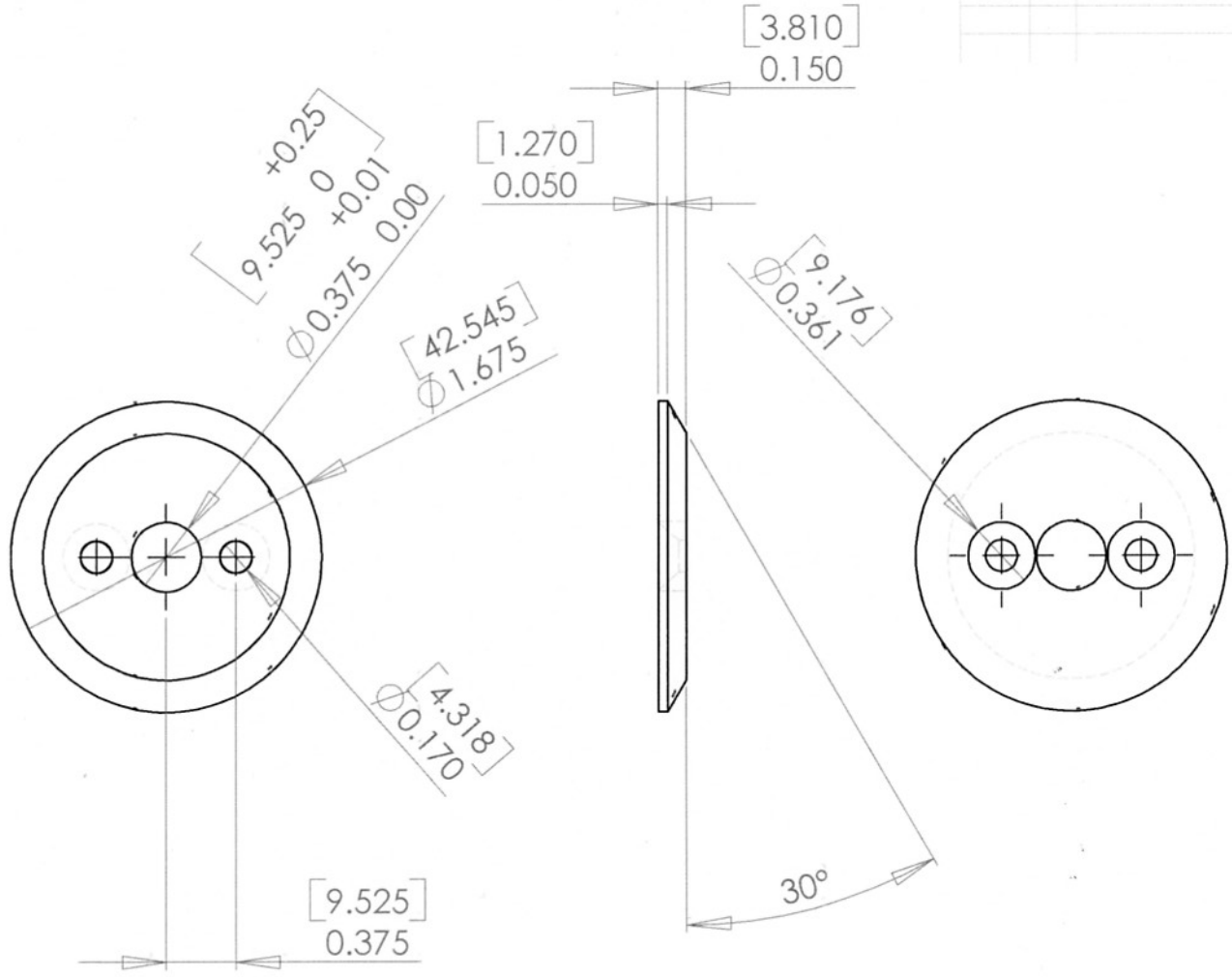

PROPRIETARY AND CONFIDENTIAL

THE INFORMATION CONTAINED IN THIS DRAWING IS THE SOLE PROPERTY OF <INSERT COMPANY NAME HERE>. ANY REPRODUCTION IN PART OR AS A WHOLE WITHOUT THE WRITTEN PERMISSION OF <INSERT COMPANY NAME HERE> IS PROHIBITED.

NEXT ASSY | USED ON

APPLICATION

DIMENSIONS ARE IN INCHES
TOLERANCES:
FRACTIONAL ±
ANGULAR: MACH ± BEND ±
TWO PLACE DECIMAL ±
THREE PLACE DECIMAL ± 0.005

MATERIAL UHMW

FINISH --

DO NOT SCALE DRAWING

	NAME	DATE
DRAWN	PAS	4/30/11
CHECKED		
ENG APPR.		
MFG APPR.		
Q.A.		

COMMENTS:

KITBOTS

Outside Pulley Flange

SIZE A | DWG. NO.

SCALE:2:1 | WEIGHT: | SHEET 1 OF 1